CASE STUDY

Addressing Imminent IPv4 Address Exhaustion and Load Balancing Needs

Company:
- SKYCable

Industry:
- Service Provider

Critical Issues:
- Leading Internet service provider in need of a solution to extend IPv4-based connectivity, in addition to a need to address increased loads on DNS and Caching Servers.

Selection Criteria:
- Cost effectiveness
- Future proof
- Small footprint in the data center
- Implementation speed
- Industry standard mangeability product

Solution:
- A10 CGN for IPv4/IPv6 solution
- A10 ADC for SLB solution

Results:
- Addressed expansion issues for today and tomorrow by preserving IPv4 addresses and supporting future transition to IPv6.
- Handling increased traffic volumes on a stable infrastructure, which enables data center efficiency due to industry standard CLI and intuitive GUI interfaces and smaller rack space required for installation.
- This has contributed SKYCable to continue to provide a superior ISP experience to its compared competitors.

> *"We chose the A10 ADC because it has the functionality that we need right now, the features that we need to migrate to IPv6 and is a cost effective solution. It does everything we need while taking up very little space in the rack."*
>
> **Eugene Flores**
> NOC Supervisor
> SKYCable

SKYCable, established in January, 1990, is the largest cable television provider in the Philippines. In 2006, SKYCable introduced the first prepaid cable TV service and, in 2008, introduced SKYBROADBAND, the fastest residential Internet service in the country. Today, over 500,000 subscribers have made SKYCable the number one cable TV service provider in the Philippines.

SKYCable, with over half a million subscribers, is the number one cableTV service provider in the Philippines, offering the best and most variedcable programs. The success of SKYCable throughout the years hasenabled the business to expand and go beyond just providing cable TV service. Since its launch in 2008, SKYBroadband has grown to be one ofthe most competitive broadband service providers, offering the fastestresidential broadband packages with record breaking ultra-high speedsof up to 200 Mbps. SKYCable expects to see strong growth in demandfor high-speed broadband services, and aims to maintain its leading position in the market by being customer focused and increasing the strength and redundancy of its network.

SKYCable was facing a crunch on the availability of public IP addresses, and needed to find a way to maximize their current allocation until IPv6 adoption increases. SKYCable needs to be able to provide IPv4 connectivity for its growing user base, while obtaining additional blocks of IPv4 addresses from the Regional Internet Registry (RIR) is becoming increasingly difficult, if not impossible—a scenario that many ISPs face. SKYCable, with their absolute commitment to customer service, wanted to find a quick and effective solution to the issue.

The use of complex route maps to distribute load among the servers can alleviate load issues in the short term. However, SKYCable needed to find a solution that is future proof and addresses their high availability and scalability concerns.

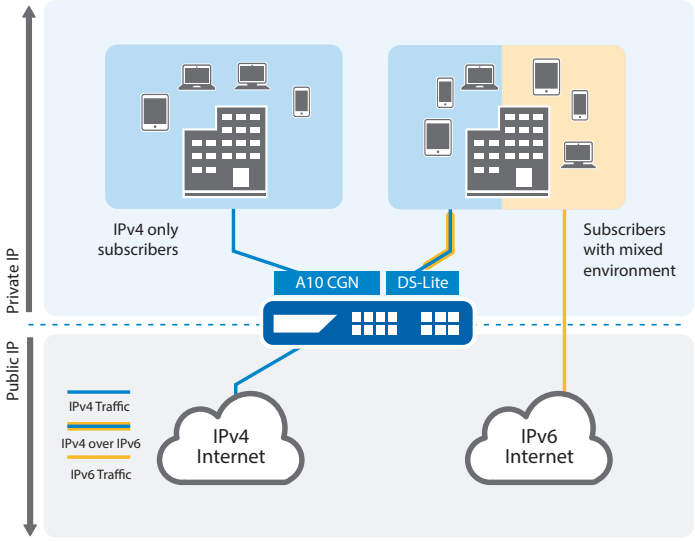

IPv4 Preservation/IPv6 Migration Solution

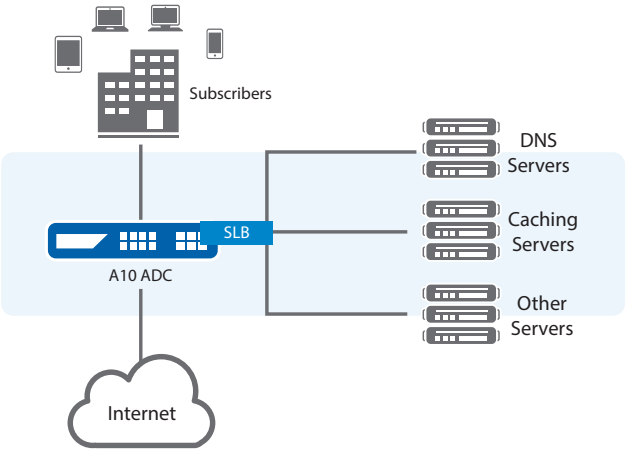

Server Load Balancing Solution

The A10 Networks Solution

The first element of the solution for SKYCable was the implementation of Carrier-Grade NAT (CGNAT), also known as Large Scale NAT (LSN), using A10 Networks CGN line of Carrier Grade Networking gateways. The CGN functionality is appropriate for extending the availability of existing IPv4 addresses, by mapping private addresses onto public IPv4 addresses with advanced stateful tracking of active sessions. The A10 CGN includes a range of features that can be used for IPv6 migration. It includes IPv6 Rapid Deployment (6rd), Dual-Stack Lite (DS-Lite) and NAT64/DNS64 functionality to allow for incremental IPv6 deployment. A single A10 CGN device provides more powerful than multiple expensive, chassis-based processing cards used in the NAT solutions of large networking vendors, and instead provides a compact and complete solution for IPv6 migration. At the same time, SKYCable was experiencing availability and load issues on their server farms, specifically on DNS and local cache servers.

Powerful Server Load Balancing (SLB)

Following the success of this initial project, a second project was recently implemented by SKYCable, deploying A10 application delivery controllers (ADC) to manage their DNS and local caching servers to improve server farm resiliency. SKYCable reports that this has improved service availability and significantly simplified their network traffic management configurations.

SKYCable chose from several SLB solutions and held detailed discussions on their features and capabilities with different local partners before deciding to go with the A10 ADC as the right solution.

Following the choice of A10's CGN functionality, SKYCable has also been pleased with A10's ADC solution. In addition, the appliances are much more compact in terms of the space required in their data center racks. This is similar to the experience of other A10 customers, who have reported reductions of up to 50 percent in both power consumption and rack-space requirements through the deployment of A10 products for load balancing.

For SKYCable, another factor in the choice of A10 for SLB was the quick implementation of the proof of concept (POC) compared to the solutions from other vendors. The POC showed SKYCable the features and capabilities of the solution and it simply worked very smoothly.

Manageability of the A10 ADC is excellent, with both CLI and GUI management interfaces available. For SKYCable, the CLI is the preferred management tool, but they find the GUI extremely useful for monitoring traffic. "We find the A10 ADC configuration simple and their web monitoring and administration comprehensive," said Flores.

SKYCable found that there was no need for additional training to be able to use the CLI and that existing configuration tools could be used, as the CLI follows industry standards.

During further discussion, SKYCable mentioned that A10 provided strong support and that A10's value of "Customer Driven Innovation" makes it stand apart from the competition. This has allowed SKYCable to feel entirely comfortable with their choice of A10 Networks. For SKYCable, the implementation of A10 Networks' products has enabled them to keep ahead of the competition in providing the best ISP experience in the Philippines.

About A10 Networks

A10 Networks is a leader in application networking, providing a range of high-performance application networking solutions that help organizations ensure that their data center applications and networks remain highly available, accelerated and secure. Founded in 2004, A10 Networks is based in San Jose, California, and serves customers globally with offices worldwide. For more information, visit: **www.a10networks.com**

Corporate Headquarters

A10 Networks, Inc
3 West Plumeria Ave.
San Jose, CA 95134 USA
Tel: +1 408 325-8668
Fax: +1 408 325-8666
www.a10networks.com

Part Number: A10-CS-80120-EN-01
Jan 2015

Worldwide Offices

North America
sales@a10networks.com
Europe
emea_sales@a10networks.com
South America
latam_sales@a10networks.com
Japan
jinfo@a10networks.com
China
china_sales@a10networks.com
Taiwan
taiwan@a10networks.com
Korea
korea@a10networks.com
Hong Kong
HongKong@a10networks.com
South Asia
SouthAsia@a10networks.com
Australia/New Zealand
anz_sales@a10networks.com

To learn more about the A10 Thunder Application Service Gateways and how it can enhance your business, contact A10 Networks at: **www.a10networks.com/contact** or call to talk to an A10 sales representative.

©2015 A10 Networks, Inc. All rights reserved. The A10 logo, A10 Harmony, A10 Lightning, A10 Networks, A10 Thunder, aCloud, ACOS, ACOS Policy Engine, Affinity, aFleX, aFlow, aGalaxy, aVCS, AX, aXAPI, IDaccess, IDsentrie, IP-to-ID, SoftAX, SSL Insight, Thunder, Thunder TPS, UASG, VirtualN, and vThunder are trademarks or registered trademarks of A10 Networks, Inc. All other trademarks are property of their respective owners. A10 Networks assumes no responsibility for any inaccuracies in this document. A10 Networks reserves the right to change, modify, transfer, or otherwise revise this publication without notice.